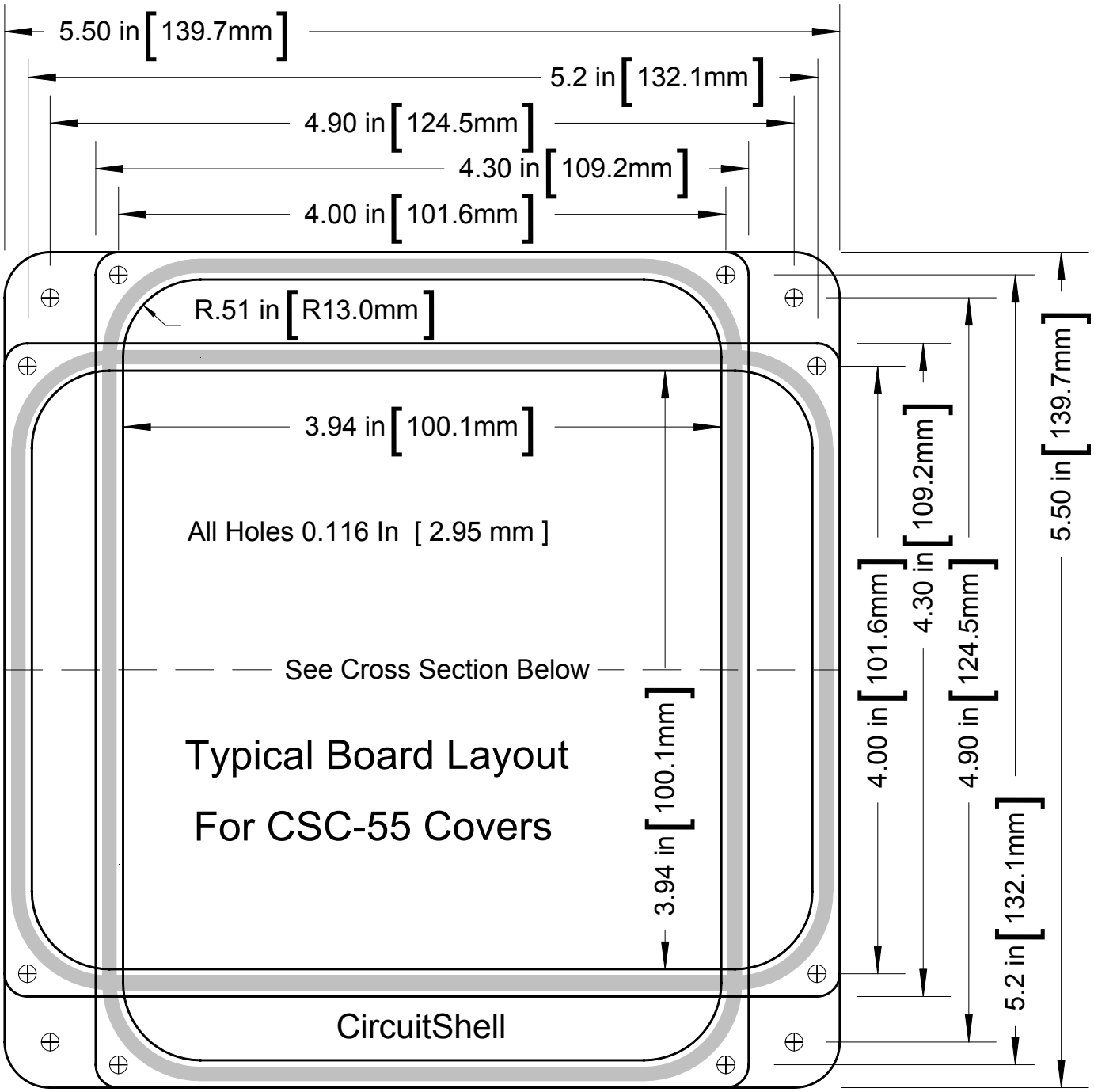
5.50 in [139.7mm]
5.2 in [132.1mm]
4.90 in [124.5mm]
4.30 in [109.2mm]
4.00 in [101.6mm]
R.51 in [R13.0mm]
3.94 in [100.1mm]
All Holes 0.116 In [ 2.95 mm ]
See Cross Section Below
Typical Board Layout
For CSC-55 Covers
CircuitShell
3.94 in [100.1mm]
4.00 in [101.6mm]
4.30 in [109.2mm]
4.90 in [124.5mm]
5.2 in [132.1mm]
5.50 in [139.7mm]

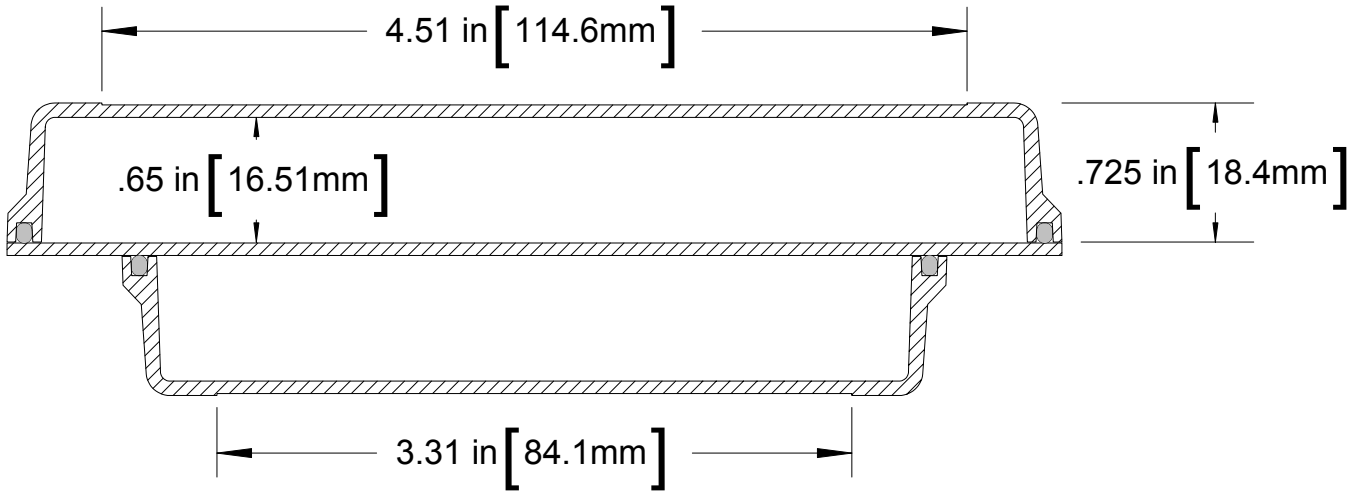
4.51 in [114.6mm]
.65 in [16.51mm]
.725 in [18.4mm]
3.31 in [84.1mm]